INVESTIGATION OF STRESSES IN THE END ZONES OF PRECAST INVERTED T-BEAMS WITH TAPERED WEBS

Fatmir Menkulasi, PE, Via Department of Civil and Environmental Engineering, Virginia Tech, Blacksburg, VA
Carin L. Roberts Wollmann, PhD, PE, Via Department of Civil and Environmental Engineering, Virginia Tech, Blacksburg, VA
Tommy Cousins, PhD, PE, Via Department of Civil and Environmental Engineering, Virginia Tech, Blacksburg, VA

ABSTRACT

Short to medium span composite bridges constructed with adjacent precast inverted T-beams and cast-in-place topping are intended to provide a higher degree of resiliency against reflective cracking and time dependent effects compared to voided slab and adjacent box girder systems. This paper investigates the stresses in the end zones of such a uniquely shaped precast element. The transfer of prestressing force creates vertical and horizontal tensile stresses in the end zones of the girder. A series of 3-D finite element analyses were performed to investigate the magnitude of these tensile stresses. Various methods of modeling the prestressing force including the modeling of the transfer length are examined and the effect of notches at the ends of the precast beams is explored. Existing design methods are evaluated and strut and tie models, calibrated to match the results of 3-D finite element analysis are proposed as alternatives to existing methods to aid designers in sizing reinforcing in the end zones. It is shown that the magnitude of tensile stresses in the pre-tensioned anchorage zones depends on the eccentricity of the prestressing force. Recommendations for how to apply existing provisions and recommendations to such a uniquely shaped precast member are presented.

Keywords: Pretensioned anchorage zones, End stresses, Cracking

INTRODUCTION

End regions of prestressed members are subject to high concentrated loads during the transfer of the prestressing force. Accordingly, the state of stress in these regions is complicated and cannot be predicted by the Euler-Bernoulli beam theory, in which plane sections are assumed to remain plane. According to Saint Venant's principle[1], the disturbance caused by the concentrated forces at the ends of the member diminishes after a distance *h* from the end of the member, where *h* is the overall depth of the member. In pre-tensioned concrete members, the transfer of the prestressing force into the surrounding concrete creates tensile stresses in the end zones. These stresses are characterized as spalling, splitting and bursting stresses. Spalling stresses are vertical tensile stresses that occur near the end face at the centroid of the member. Splitting stresses are circumferential tensile stresses that occur around each individual prestressing strand along the transfer length and result from the radial compressive stresses caused by bond. Bursting stresses are vertical tensile stresses that occur along the line of the prestressing force, beginning a few inches into the member and extending through the transfer length. When these tensile stresses exceed the modulus of rupture of concrete, cracks form, which may compromise the shear and flexural strength of the member near that region as well as its durability.

AASHTO LRFD Specifications[2] require that reinforcing be provided in pre-tensioned anchorage zones to resist 4% of the total prestressing force. The Specifications also require that this reinforcing be placed within a distance that is equal to *h/4* from the end of the beam, where *h* is the overall dimension of the precast member in the direction in which "splitting" resistance is evaluated. These provisions, incorrectly labeled as splitting provisions, are intended to resist spalling forces. The value of *h* and the direction in which the reinforcing required to resist the spalling forces is oriented, depends on the shape of the member. For example, for pre-tensioned I-girders or bulb tees, *h* represents the overall depth of the member and the end zone reinforcing is placed vertically within a distance equal to *h/4* from the end of the member. For pre-tensioned solid or voided slabs, *h* represents the overall width of the section and the end zone reinforcing is placed horizontally within *h/4*. For pre-tensioned box or tub girders with prestressing strands located in both the bottom flange and the webs, end zone reinforcing is placed both horizontally and vertically within h/4, where "h" is the lesser of the overall width or height of the member. Although not specifically addressed in AASHTO[2], the confinement requirements of AASHTO[2] 5.10.10.2 should help control the bursting and splitting stresses that develop in the transfer length region (French et al.[3]). It should be noted that the Specifications[2] require that end zone reinforcing be provided in the vertical plane, horizontal plane or both planes regardless of the geometry of the pre-tensioned member, the strand pattern or the eccentricity in the plane under consideration.

The research presented in this paper investigates stresses in the end zones of precast inverted T-beams with tapered webs. This unique precast shape is intended for the construction of short to medium span bridges. The inverted T-beam bridge system provides an accelerated bridge construction alternative and consists of adjacent precast inverted T-beams finished with a cast-in-place concrete topping. The adjacent precast inverted T-beams serve as stay-in-place formwork for the cast-in-place concrete topping and eliminate the need for site-installed

formwork. This bridge system is intended to address reflective cracking problems present in composite bridges built with the traditional adjacent voided slab or adjacent box beam systems. The tapered precast webs help emulate monolithic construction by providing enhanced resistance against transverse tensile stresses induced because of transverse bending[4]. In addition, the tapered precast webs increase the resiliency of the bridge system against longitudinal and transverse cracking caused by differential shrinkage[5]. Virginia Department of Transportation is implementing the system for the first time in a bridge replacement project near Richmond, VA.

Because the inverted T-beam system featuring adjacent precast inverted T-beams with tapered webs and cast-in-place topping is a new bridge system, , there is a need to evaluate the applicability of the current Specification[2] provisions for pre-tensioned anchorage zones. Figure 1(a) shows the elevation of the first application of the inverted T-beam system in the US 360 Bridge over the Chickahominy River and Figure 1(b) shows the transverse cross-section of the bridge. The US 360 Bridge is a two-span continuous bridge. The design span for the precast inverted T-beams is 41.5 feet. The design concrete compressive strength at transfer is f'_{ci} = 5 ksi. Figure 2(a) shows an isometric view of the end of the precast beam featuring recessed precast flanges at bearing locations to avoid high flexural stresses at the precast web-flange intersection. The recession of precast flanges allows the precast web to resist the reaction at the support and prevents the transverse bending of a 4 in. flange, which would take place if the flanges are not recessed. The length of precast flange recession is 12 in. Three 6 in. by 9 in. by ½ in. elastomeric bearing pads (70 durometer hardness) were provided at the ends of each precast inverted T-beam and were located within the width of the precast web. The rest of the bearing area was covered with ½ in. preformed asphalt joint filler.

Figure 2(b) and 2(c) show the end zone reinforcing at Sections 1 and 2, respectively. End zone mild steel reinforcing consists of AASHTO[2] required confinement steel, and features No.4 stirrups. The first four rows of confinement steel are placed at 3 in. on center with the first row at 2 in. from the end face. The rest of the confinement steel is placed at 6 in. on center. In addition, four legs of No.4 extended stirrups are provided at the same spacing as the confinement steel. Beyond a distance equal to 1.5*d*, where *d* is the effective depth of the member, the spacing of closed and extended stirrups is 12 in. Past the flange cuts, horizontal transverse steel consisting of No.4 at 8 in. on center is provided to resist the wet weight of cast-in-place concrete topping and transverse bending moments due to live loads. All prestressing steel is concentrated within the footprint of the precast web. The bottom two layers of prestressing consist of 24 0.6 in. diameter strands (twelve strands in each layer). The top layer consists of two 0.6 in. diameter strands. The jacking force for each Grade 270 strand was 44 kips. The eccentricity of the strand group is 2.99 in. In addition to the 26 fully stressed strands described above, four additional strands stressed only to 1 kip were provided between the two fully stressed top strands to facilitate the placement of extended stirrups. Longitudinal normal stresses during transfer were kept below AASHTO[2] allowable stresses without the need to resort to strand debonding.

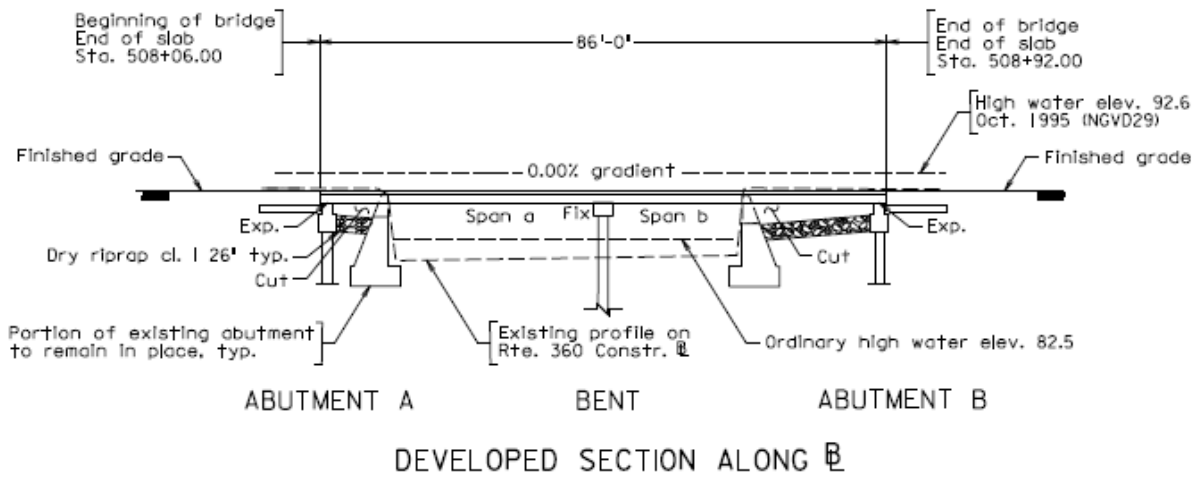

(a)

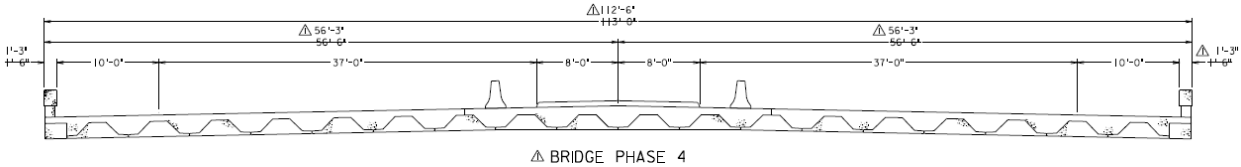

(b)

Figure 1. (a) Elevation of US 360 Bridge, (b) Transverse cross-section of US 360 Bridge

Because of the unique shape of the cross-section of the precast beam, the diffusion of the prestressing force will occur in both the vertical and horizontal planes. The purpose of this paper is to quantify normal tensile stresses at the end zones in both planes and determine whether these stresses are high enough to cause cracking. A series of 3-D finite element analyses were performed to investigate the magnitude of these tensile stresses. Various methods of modeling the prestressing force including the modeling of the transfer length are examined and the effect of notches at the end of the precast beams is explored. Existing design methods are evaluated and strut and tie models, calibrated to match the results of 3-D finite element analysis, are proposed as alternatives to existing methods to aid engineers in sizing reinforcing in the end zones.

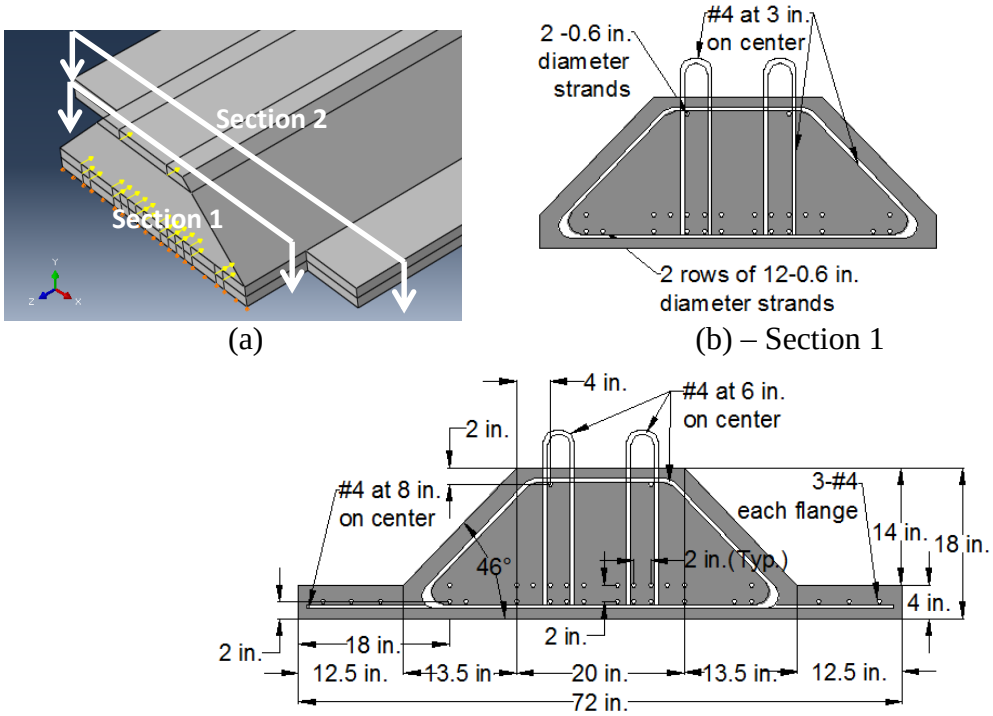

Figure 2. (a) Isometric view of precast section, (b) Section 1 (c) Section 2

RELATED STUDIES

Gergerly et al.[6] state that the horizontal cracks that frequently form in the end region of prestressed concrete members when the prestressing strand is released and the prestressing force is transferred to the concrete section are defined as "spalling" cracks, though often incorrectly labeled as "bursting" or "splitting" cracks. If unrestrained, these cracks can extend into the precast member and negatively impact the flexural and shear strength and durability of the member. Studies performed by Fountain[7] suggest that these cracks cannot be eliminated, however vertically oriented reinforcing steel can limit crack width and propagation.

Gergerly et al.[6] showed that the distribution of the tensile stresses in the end region depends on the eccentricity of the prestressing force in the member. For example, in a concentrically loaded member forces distribute symmetrically through the vertical member height until a uniform stress distribution is established at a distance *h* from the end of the member (Saint Venant's principle[1]). In such a member, the spalling forces developed at the end face are smaller than the bursting forces that develop at a distance *h/2* from the end of the member (Figure 3 (a)). Conversely, in an eccentrically loaded member the spalling forces developed near the end face are higher than the bursting forces developed a certain distance away from the end of the member (Figure 3 (b)). Hawkins[8] corroborated Gergerly's[6] findings and found that as eccentricity increased so did the magnitude of maximum tensile stress in the spalling zone.

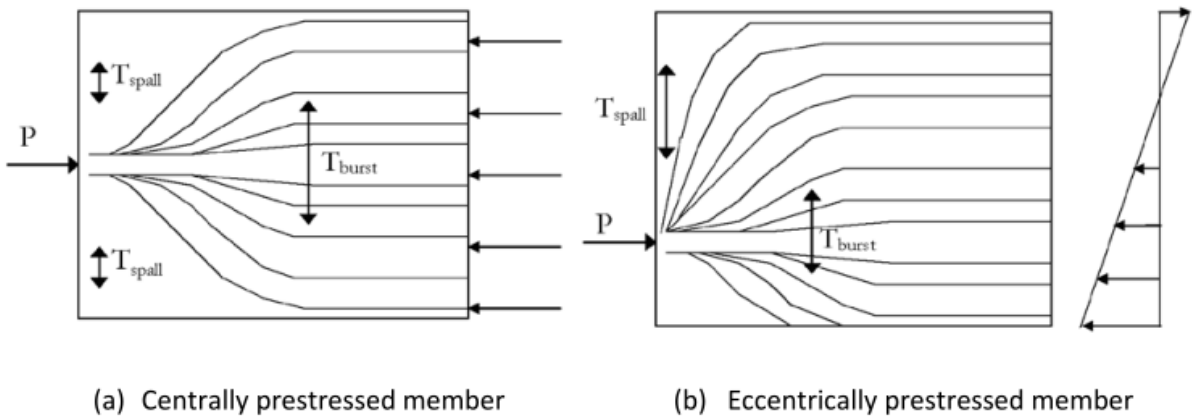

Figure 3. Flow of stresses in the end zone (French et al.[3])

Eriksson[9] performed an evaluation of the stresses in the end zones of precast inverted T-beams with straight webs to determine the applicability of the AASHTO provisions[2] on pre-tensioned anchorage zones. Because the overall depth of precast inverted T-beams is relatively shallow compared to I-girders, the requirement to place the vertical steel in the end zone within a distance equal to *h/4* from the end of the member results in congestion problems. However, as stated earlier, the placement of vertical steel in the end zones of wide and shallow members (solid or voided slabs) is relaxed by allowing the designer to spread this steel within a distance *h/4* where *h* is the width of the member rather than its depth. According to French et al.[3] such a relaxation may not be appropriate when trying to control spalling stresses, because in eccentrically loaded members, the magnitude of spalling stresses diminishes quickly away from the end of the member.

The evaluation that Eriksson[9] and French et al.[3] performed included experimental and numerical studies. The experimental study was performed on laboratory bridge specimens, constructed with precast inverted T-beams, which featured various configurations of end zone reinforcing (Table 1). The experimental results revealed that the 12 in. deep precast sections had sufficient strength to resist the tensile stresses created in the end zone even in cases where no vertical steel was present. These findings were corroborated with the results of numerical studies that showed certain inverted-T members did not require spalling reinforcement, specifically those members with depths less than 22 in. for which the expected concrete strength was higher than the expected tensile stresses due to the development of prestress (French et al.[3]).

In contrast, for deep inverted T-beams, it was numerically determined that larger amounts of spalling reinforcement than specified by AASHTO's provisions[2] for splitting resistance is required. It was also concluded that the reinforcement should be placed as close to the end of the beam as possible (i.e., within *h/4* of the end of the member, where *h* represents the depth of the member). For the numerical study, finite element modeling was used to

determine the magnitude and location of spalling and bursting stresses by employing several simplifications to reduce the complexity and computational requirements of the model. The flanges were neglected to allow for the system to be modeled as a two-dimensional rectangular slab. As a result, spalling and bursting stresses were only investigated in the vertical plane.

Table 1. Vertical reinforcement in configurations 1-4 of the precast members utilized in experimental study (French et al.[3])

Configuration	Description of Vertical End Zone Reinforcement	Cross Section View of Stirrup	Elevation View of Reinforcement Spacing
1	#3 stirrup at 2 and 4 in. total area = 0.44 in^2		2 spaces @ 2 in. 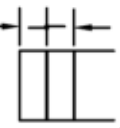
2	#4 stirrup at 2 in. total area = 0.40 in.^{2}	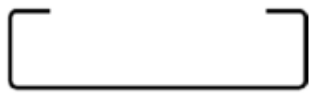	1 space @ 2 in. 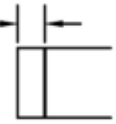
3	#5 four legged stirrup at 2 and 4 in. total area = 2.5 in.^{2}	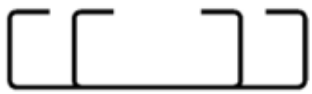	2 spaces @ 2 in. 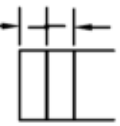
4	#5 stirrup at 2 and 4 in. total area = 1.2 in.^{2}	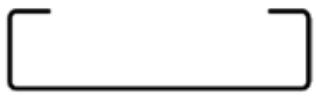	2 spaces @ 2 in. 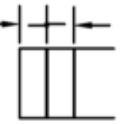

Some of the suggested modifications to AASHTO[2] Article 5.10.10.1 that resulted from this study are presented below:

- For all sections other than rectangular slabs and shallow inverted-T sections with heights less than 22 in, the spalling resistance of pretensioned anchorage zones provided by reinforcement in the ends of pretensioned beams shall be taken as:

$$P_r = f_s A_s \tag{1}$$

$where$:
f_s = stress in steel not to exceed 20 ksi
A_s = total area of reinforcement located within the distance h/4 from the end of the beam (in.^{2})
h = overall dimension of precast member in the direction in which spalling resistance is being evaluated (in.)

The resistance shall not be less than four percent of the total prestressing force at transfer.

- In pretensioned anchorage zones of rectangular slabs and shallow inverted-T sections with heights less than 22 in., vertical reinforcement in the end zones is not required if:

$$\sigma_s < f_r \tag{2}$$

where:

$$\sigma_s = \frac{P}{A}\left(0.1206\frac{e^2}{h\,d_b} - 0.0256\right) \geq 0 \tag{3}$$

$$f_r = 0.23\sqrt{f'_{ci}} \tag{4}$$

σ_s = maximum spalling stress on the end face (ksi)
f_r = direct tensile strength as defined by Article C5.4.2.7 (ksi)
P = prestressing force at transfer (kips)
A = gross cross-sectional area of concrete (in^2)
e = strand eccentricity (in.)
h = overall depth of precast member (in.)
d_b= prestressing strand diameter (in.)
f'_{ci} = concrete compressive strength at transfer (ksi)

Where end zone vertical reinforcement is required, it shall be located within the horizontal distance *h/4* from the end of the beam, and shall be determined as:

$$A_s = \frac{P\,(0.02\frac{e^2}{h\,d_b} - 0.01)}{f_s} \tag{5}$$

The resistance shall not be less than four percent of the total prestressing force at transfer. In all cases, the reinforcement shall be as close to the end of the beam as practicable. Reinforcement used to satisfy this requirement can also be used to satisfy other design requirements.

In the suggested modifications presented above, the modulus of rupture is taken equal to $0.23\sqrt{f'_{ci}}$. The commentary of Article C5.4.2.6 in AASHTO[2] states that: "Most modulus of rupture test data on normal weight concrete is between $0.24\sqrt{f'_c}$ and $0.37\sqrt{f'_c}$…… The given values may be unconservative for tensile cracking caused by restrained shrinkage, anchor zone splitting, and other tensile forces caused by effects other than flexure. The direct tensile strength stress should be used for these cases". In addition, the commentary of Article C5.4.2.7 in AASHTO[2] states:" For normal weight concrete with specified compressive strengths up to 10 ksi, the direct tensile strength may be estimated as $f'_r = 0.23\sqrt{f'_c}$". Accordingly, the estimation of the tensile strength based on $0.23\sqrt{f'_{ci}}$ to determine the likelihood of cracking at the end zones because of the diffusion of the prestressing force is consistent with AASHTO's commentary[2].

As stated earlier, because the precast inverted T-beam with tapered webs features a unique shape, there was a need to evaluate the applicability of the current provisions given in the AASHTO LRFD Specifications[2], as well as the recommendations made by Erisksson[9] and French et al.[3] for the vertical plane.

The numerical study performed by Erikkson[9] was based on 2D finite element models using shell elements and by modeling only the portion of the precast web. The presence of precast flanges was ignored to make possible such an idealization in 2D. In this study, the precast beams are modeled as 3D components using 3D continuum elements for concrete and 3D embedded truss elements for prestressing strands. As a result, tensile stresses in the end zones are investigated in the vertical plane as well as in the horizontal plane. Such 3D modeling was essential for the precast inverted T-beams with the tapered webs, because, in this case a 2D idealization would not be justified.

INVESTIGATION USING FINITE ELEMENT ANALYSIS

The precast inverted T-beam section used in the construction of the US 360 Bridge was modeled using 3D continuum elements using the commercially available finite element software Abaqus[10]. Initially, stresses and deflections due to the self-weight of the member were computed using a 2 in. mesh with the purpose of comparing them with those calculated using the Euler-Bernoulli beam theory. Figure 4 shows the longitudinal normal stress contours due to the self-weight of the member and Figure 5 shows vertical displacement contours. Table 2 shows a comparison between stresses and deflections computed using finite element analysis and those based on “hand calculations” using the Euler-Bernoulli beam theory. This comparison was carried out for the top and bottom fibers at mid-span of the beam. The difference in the results is very small, which demonstrates that a 2 in. mesh can properly capture the effects of the self- weight of the member. Mid-span deflections were identical whereas the small differences in top and bottom stresses can be attributed to the 3D state of stress in the finite element model compared to the 1D stress state employed in the beam line theory used in “hand calculations”.

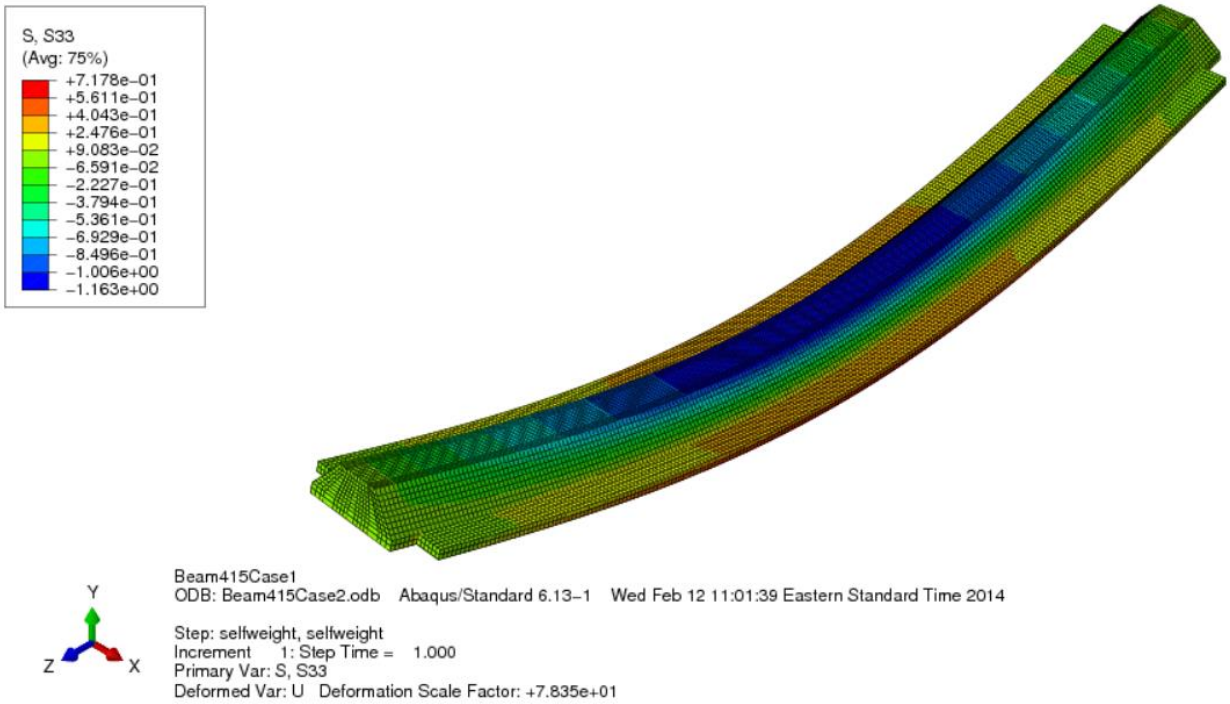

Figure 4. Longitudinal normal stress due to self-weight

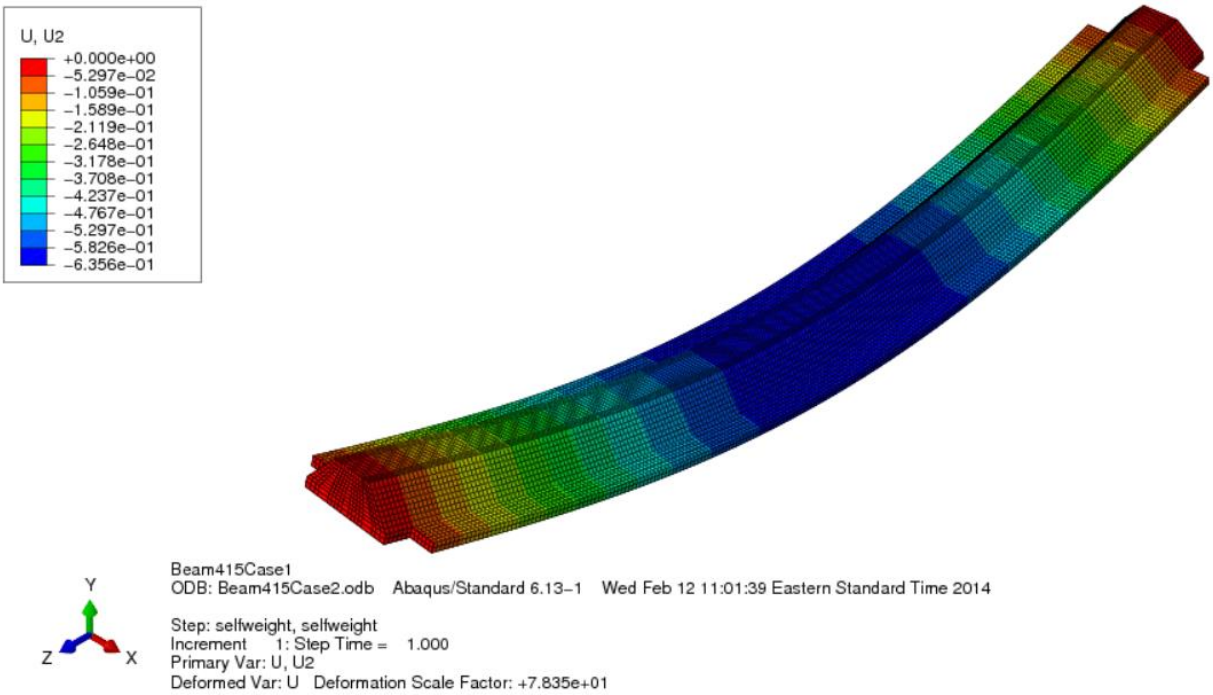

Figure 5. Deflection due to self-weight

Table 2. Comparison of stress and deflections due to self-weight

		FEA*	Euler-Bernoulli	% Difference
Max. longitudinal stress (ksi)	**Mid-span - Top**	1.16	1.17	0.9
	Mid-span - Bottom	0.72	0.74	3.0
Deflection (in.)	**Mid-span**	0.64	0.64	0.0

*FEA = Finite Element Analysis

US 360 BRIDGE GIRDER (41.5 FOOT LONG)

The implementation of the inverted T-beam system in the US 360 Bridge provided a good opportunity to observe the performance of a unique precast shape immediately after prestress transfer. The modulus of elasticity for the precast beam at transfer was calculated based on the formula provided in Article 5.4.2.4 of AASHTO LRFD Specifications[2] as a function of the design compressive strength at transfer and was 4287 ksi. Poisson's ratio was used as 0.2 (based on Article 5.4.2.5 of AASHTO LRFD Specifications[2]). Linear elastic finite element analyses, which are appropriate up to the initiation of cracking, were performed to investigate normal stresses at the end zones in the vertical and horizontal planes. Various methods of modeling the prestressing force were considered with the purpose of identifying the most accurate modeling technique. In all the modeling techniques presented in the following sections, only the effect of the fully stressed 26 strands was considered. The effect of the four additional top strands used for constructability and stressed only to 1 kip was considered negligible.

Vertical Plane - Case 1

The prestressing force in Case 1 was modeled as a series of concentrated loads at the ends of the precast beam simulating a condition similar to a post-tensioned beam (Figure 6). As stated earlier, concrete in the precast beam was modeled using 3D continuum elements. The advantage of this modeling technique is simplicity. The strands are not modeled and the entire prestressing force is assumed to be applied at the ends of the precast beam. This modeling technique does not take into consideration the transfer length for the prestressing force. The magnitude of the prestressing force in each strand was taken as the jacking force. The magnitude of normal longitudinal stresses away from the end zones was similar to that calculated using "hand calculations" based on the principles of linear elastic mechanics of materials. However, in the end zones the magnitude of spalling stresses created because of the application of the prestressing force was unrealistically high. This was because the concentrated loads representing the force in the strands were applied entirely at the nodes of the elements at the end faces of the precast beam. These concentrated forces created high stress concentrations in the vicinity where they were applied as well as along the depth the precast beam at the ends.

A distribution of normal stresses along the depth of the precast beams is shown in Figure 7 (a). Figure 7 (b) also shows a longitudinal cut and illustrates how the magnitude of the spalling stresses diminishes away from the ends of the precast beam. The maximum tensile stress estimated at the nodes of the elements along the depth of the precast beam was 2.44 ksi, which is much higher than the modulus of rupture of the precast beam when the strands were de-tensioned. The modulus of rupture was taken equal to $0.23\sqrt{f'c}$, where f'c is in ksi. For a design compressive strength at transfer equal to f'ci = 5 ksi the modulus of rupture is approximately 0.51 ksi. Because a visual inspection of the 37 precast beams used in the construction of the US 360 Bridge (36 production beams + 1 trial), showed no signs of cracking at the end zones, such a modeling technique was deemed unrealistically conservative for designing the pre-tensioned anchorage zones. This conclusion is corroborated by previous studies, which report that tensile stresses in the end zone are affected by the transfer length (Base[11]). In addition, Uijl[12] concludes that longer transfer lengths in pre-tensioned systems result in smaller bursting and spalling stresses. Shorter transfer lengths concentrate the transfer of forces, which result in larger bursting and spalling stresses, more similar to the case of post-tensioned systems (Uijl[12]). Many theories developed from post-tensioned experiments can provide conservative estimates of the spalling and bursting stresses in pre-tensioned members, because they simulate the case of a very short transfer length (French et al.[3]).

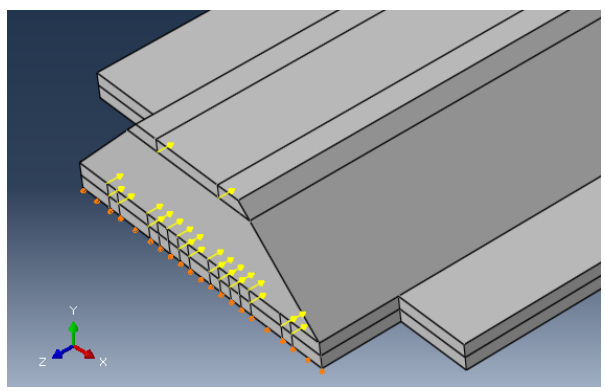

Figure 6. Prestressing applied as point loads at the ends

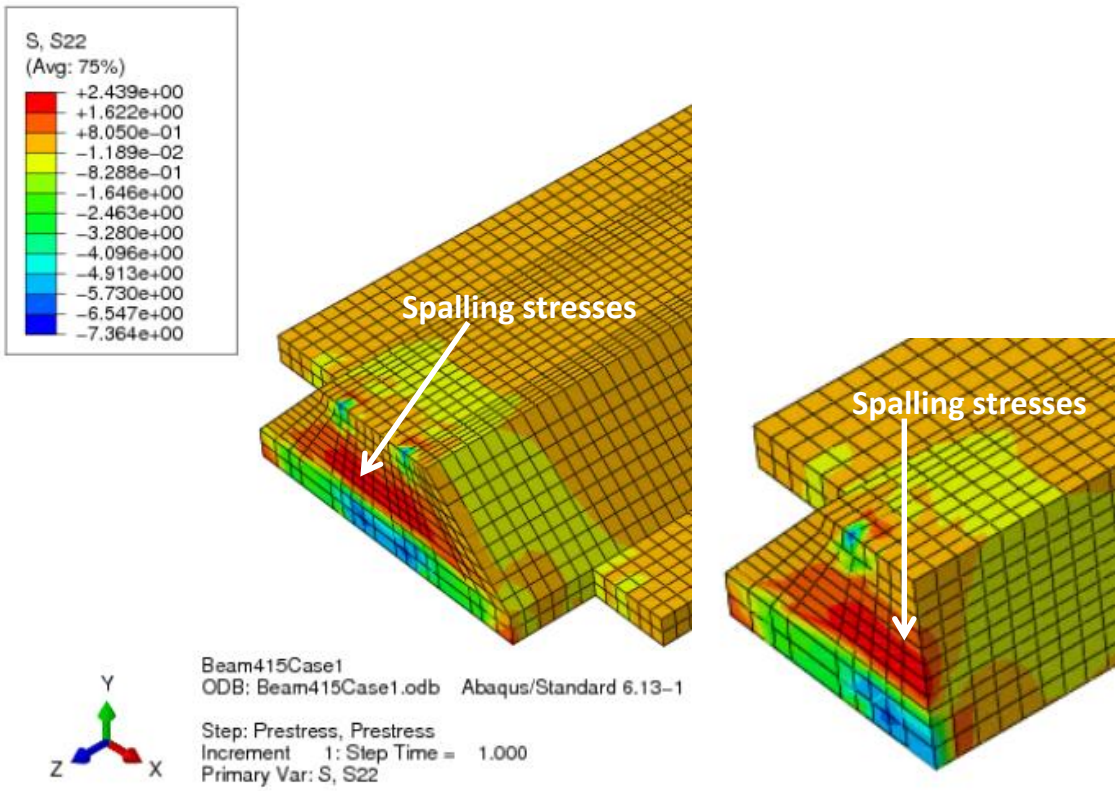

(a) (b)

Figure 7. Normal stress contours along the depth of the precast beam – Case 1 (a) full beam, (b) longitudinal cut

Vertical Plane - Case 2

In this case, the prestressing strands were modeled as embedded truss elements in perfect bond with the 3D continuum elements used for concrete. The prestressing force in the strands was modeled as an initial condition, which simulates the tensile stress in the pre-tensioned strands. This modeling capability is available in Abaqus[10]. A uniform tensile stress was applied along the length of the strands and the cross-sectional area of the strands was kept constant along the span of the precast beam. This modeling technique while more realistic than the previous one, still does not take into consideration the transfer length because it assumes that the prestressing force is constant along the length of the precast beam starting at the face of the beam. Figure 8(a) shows the normal stress contours along the depth of the precast beam. Figure 8(b) shows a longitudinal cut highlighting how the magnitude of the vertical tensile stresses diminishes away from the end of the precast beam highlighting once again that spalling stresses are the dominating type of tensile stresses at the end zones. The maximum spalling stress in this case is approximately 2.0 ksi, which is lower compared to the previous case but still unrealistic because no cracking was observed during the visual inspection of the 37 precast beams.

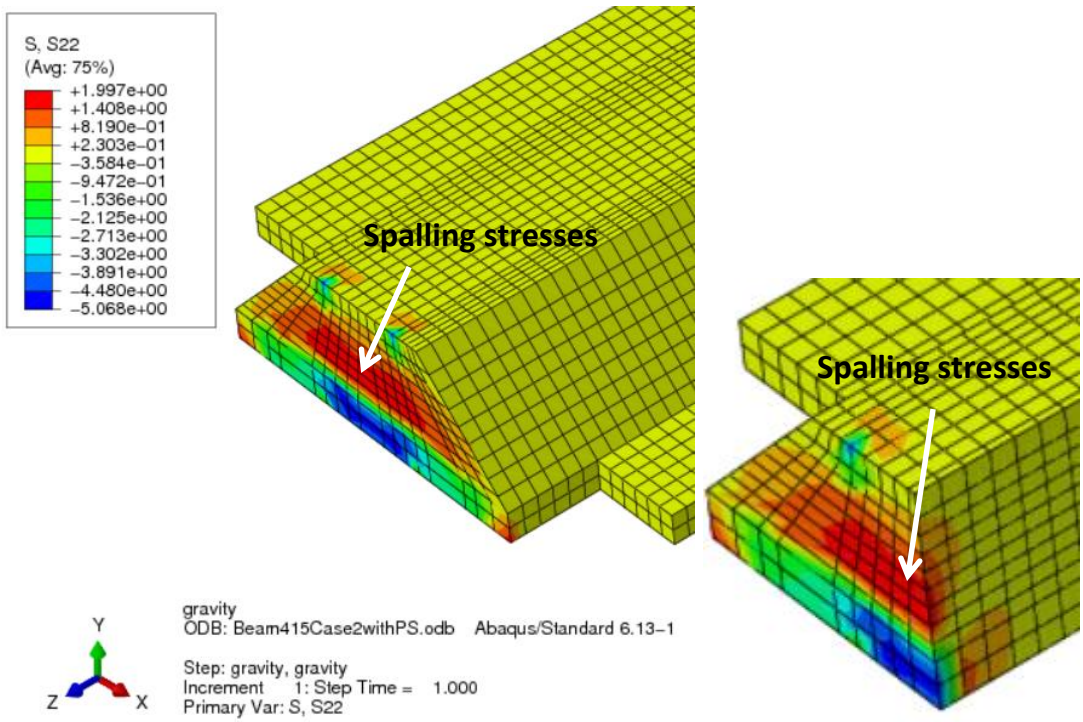

(a) (b)

Figure 8. Normal stress contours along the depth of the precast beam – Case 2, (a) full beam, (b) longitudinal cut

Vertical Plane - Case 3

The modeling technique utilized in this case is similar to that used in Case 2 with the exception that the transfer length was modeled by incrementally varying the cross-sectional area of the prestressing strands along the transfer length. The transfer length was taken equal to 60 strand diameters as given in Article 5.11.4.1 of AASHTO LRFD Specifications[2]. By keeping the magnitude of the prestress constant and by incrementally varying the cross-sectional area of the strands within the transfer length the amount of prestressing force transferred to the surrounding concrete varies linearly within the transfer length. This modeling technique is more realistic compared to the previous two techniques. The computed maximum vertical tensile stress between the top and bottom layers of strands is approximately equal to 0.4 ksi. This is smaller than the modulus of rupture (0.51 ksi) for the precast beam when the strands were de-tensioned and corroborates the fact that no cracks were observed during the visual inspection of the 37 precast beams. Figure 9 (a) and (b) show the vertical normal stress contours at the ends of the precast beam and a longitudinal cut at mid-width of the beam. The predominance of spalling stresses in precast beams in which the prestressing force is applied eccentrically towards the bottom of the beam, occurs because there is a greater concrete area above the prestressing force through which the stresses distribute. This allows the prestressing force to spread over a larger vertical distance, making the curvature of the flow of stresses greater, creating a larger spalling force near the end region (Figure 3(b))(French et. al.[3]). Hawkins[8] and Gergerly[6] corroborate this phenomenon and report that as eccentricity increases so does the magnitude of the maximum tensile stress in the spalling zone. There are two

isolated locations at the bottom corners of the precast beam where the tensile stress is around 0.9 ksi, however this higher concentration of stress is isolated only at the corner node of the corresponding element and diminishes quickly. These isolated higher concentrations of tensile stress at the bottom corners of the precast beam are believed to be a result of stress concentrations at these corners. Because the visual inspection of the 37 precast beams did not show any signs of cracking at these areas, these isolated stress concentrations are not believed to be detrimental to the structural integrity of the precast beam and its performance. In addition, the provision of AASHTO[2] required confinement steel should help control the width of any potential cracks at these locations.

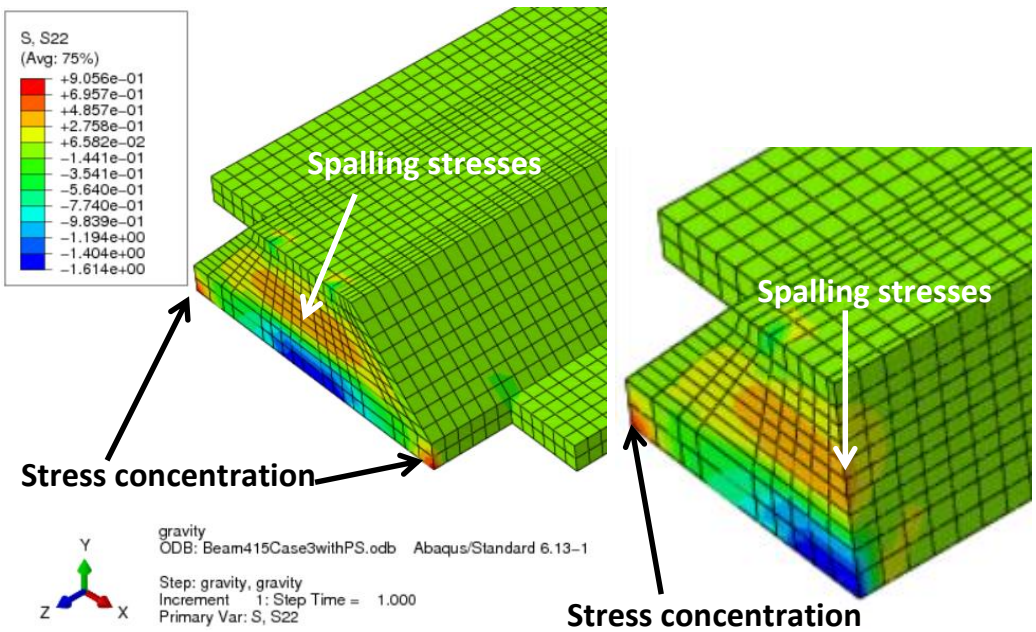

(a) (b)

Figure 9. Normal stress contours along the depth of the precast beam – Case 3, (a) full beam, (b) longitudinal cut

Vertical Plane - Case 4

The flanges of the precast beam were cut by approximately one foot at the ends to avoid high flexural stresses at the intersection of the precast flange and web at the bearing points. A finite element model without this cut was created to determine whether the presence of the cut has an adverse effect on the stresses at the end zones. Figure 10 shows the normal stress contours along the depth of the precast beam. With the flange cut eliminated the stress concentration at the bottom of the intersection between the precast flange and the precast web still exists. The magnitude of vertical tensile tresses at this location is approximately 1.34 ksi, which is higher compared to Case 3. As a result, cutting the precast flanges at the end zones reduces the vulnerability of cracking at the intersection between the precast flange and the precast web.

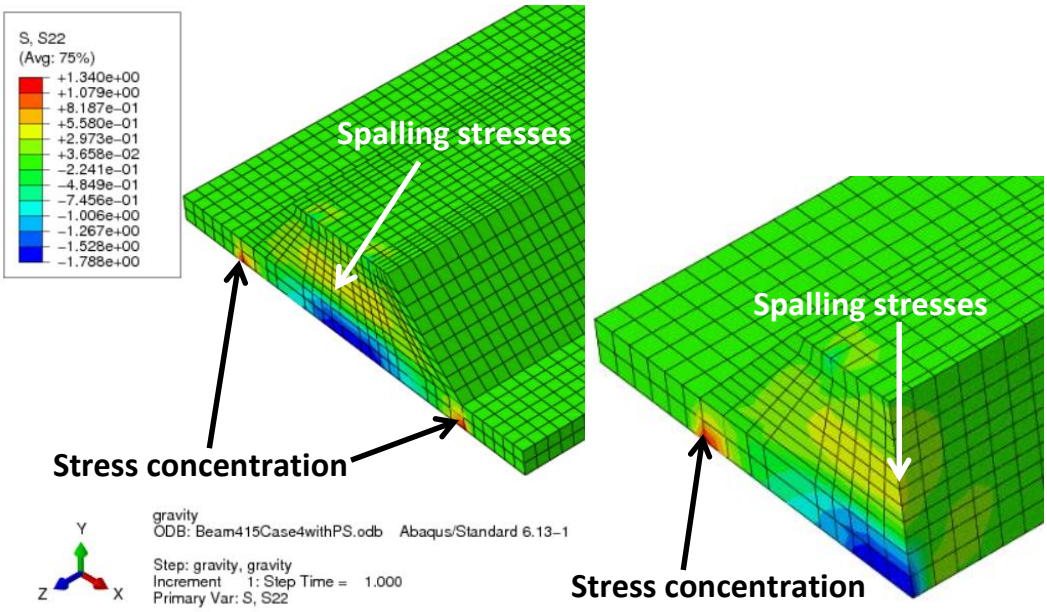

(a) (b)

Figure 10. Normal stress contours along the depth of the precast beam – Case 4, (a) full beam, (b) longitudinal cut

Horizontal Plane

The diffusion of the prestressing force was also investigated in the horizontal plane. Because the prestressing force introduced at the top layer consisted of only two 0.6 in. diameter strands and because these strands were located near the top corners of the precast web, there was limited space for the prestressing force to diffuse. Accordingly, normal tensile stresses in the horizontal plane at the top portion of the beam were negligible. However, the distribution of the prestressing force introduced at the bottom two layers (24 0.6 in. diameter strands) caused normal tensile stresses in the horizontal plane that were higher in magnitude. This is because the strands at these two layers were located within the footprint of the precast web and the prestressing force at this location could diffuse horizontally outwards towards the precast flanges. In addition, the magnitude of the prestressing force at the bottom two layers was the majority of the prestressing force introduced in the entire section. Nonetheless, the maximum normal tensile stress in the horizontal plane towards the bottom of the precast beam was only approximately 0.2 ksi, which is lower than the modulus of rupture at transfer (0.51 ksi). As a result, tensile stresses created because of the diffusion of the prestressing force in the horizontal plane were lower than the ones created in the vertical plane. Figure 11 shows horizontal normal stress contours towards the bottom of the precast beam. It can be seen that the distribution of these normal tensile stresses is fairly uniform past 12 to18 inches from the end of the beam. Because the prestressing force at the bottom two layers was symmetric about the vertical axis, there was no eccentricity in the horizontal plane. Accordingly, tensile stresses created because of the diffusion of the prestressing force in the horizontal plane were predominantly bursting stresses.

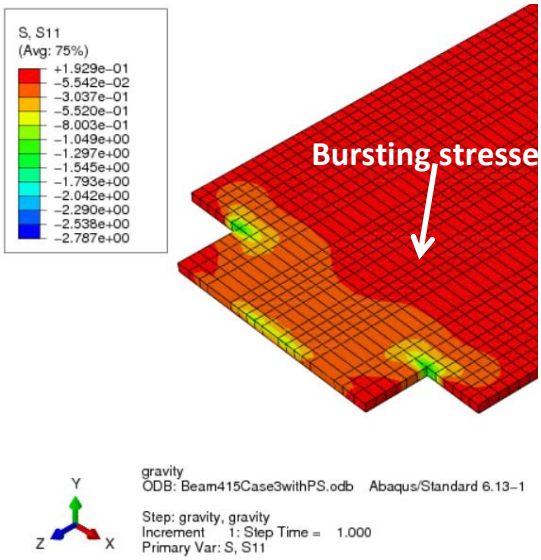

Figure 11. Normal stress contours in the horizontal plane

OTHER CASES

Because the precast inverted T-beam bridge system can be used for short to medium span bridges with spans ranging from 20 feet to approximately 60 feet, two additional cases that represent the extreme spans in this range were investigated.

20 FOOT LONG PRECAST BEAM

A composite bridge featuring 20-foot long spans was designed based on AASHTO LRFD Specifications[2] with the purpose of determining the number of prestressing strands required to resists the effects of the design loads. The cross-sectional dimensions for the precast and cast-in-place components, as well as the number and position of prestressing strands are shown in Figure 12. Material properties for the precast beam, cast-in-place concrete and prestressing strands were the same ones used for the US 360 Bridge. The prestressing force was modeled as described in Case 3 for the 41.5 foot span because that was determined to be the most accurate modeling technique. The eccentricity of the prestressing force is 1.47 in.

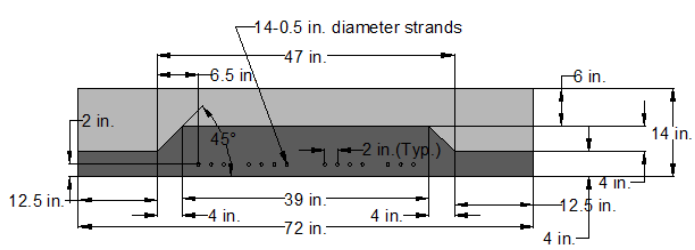

Figure 12. Typical composite bridge cross-section for a 20-foot long span (mild reinforcing not shown).

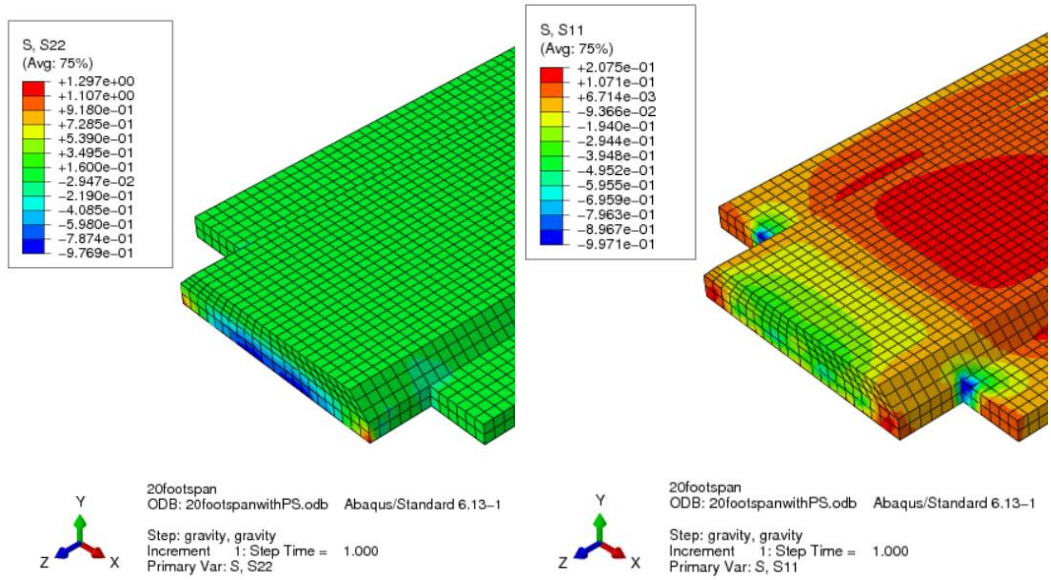

(a) (b)

Figure 13. Normal stress contours (a) vertical plane (b) horizontal plane

The magnitude of the vertical normal tensile stresses at the end zones was negligible with the exception of two isolated locations at the bottom corners of the precast web where the tensile stress was 1.3 ksi. However, as discussed previously for the precast beams used in the US 360 Bridge, these higher tensile stresses isolated only at the bottom corners of the precast web are not considered detrimental to the structural integrity and serviceability of the precast beam. In the horizontal plane, the maximum tensile stress was equal to approximately 0.21 ksi, which is still lower than the modulus of rupture of the precast beam at transfer (0.51 ksi). The creation of bursting stresses in the horizontal plane in the case of precast inverted T-beams with tapered webs is due to the diffusion of the prestressing force towards the flanges of the precast beam. This confirms the approach presented in AASHTO LRFD Specifications[2], which suggests that for pretensioned solid or voided slabs end zone reinforcing should be placed in the horizontal plane. However, for rectangular solid or voided slabs, in which the strand layout is uniform along the width of the section, the diffusion of the prestressing force in the horizontal plane will not be applicable. The negligible magnitude of spalling stresses in the vertical plane also confirms the findings from previous research that the magnitude of spalling stresses is directly proportional to the eccentricity of the prestressing force.

60 FOOT LONG PRECAST BEAM

A composite bridge featuring a 60-foot long span was designed based on AASHTO LRFD Specifications[2] to represent a long span for the inverted T-beam system. The cross-sectional dimensions for the precast beam and the cast-in-place topping are shown in Figure 14. The eccentricity of the prestressing force is 3.94 in. The material properties for the precast beam, cast-in-place topping and prestressing strands were identical to the ones used for the US 360 Bridge. In this case the magnitude of spalling stresses near the end of the beam exceeded the modulus of rupture of the precast beam at transfer (0.51 ksi). The maximum tensile stress

in the vertical direction was 0.83 ksi. Consequently, spalling stresses at the end zones of precast beams used for similar spans present a potential for cracking at the end zones. The magnitude of bursting stresses in the horizontal plane was lower than the modulus of rupture of the precast beam at transfer with the maximum tensile stress equal to 0.27 ksi. Accordingly, bursting stresses in the horizontal plane did not present a potential for cracking in the end zones.

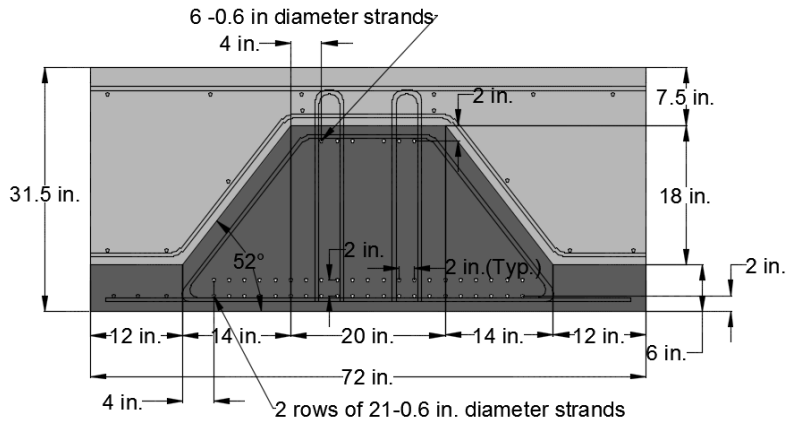

Figure 14. Typical composite bridge cross-section for a 60-foot long span (mild reinforcing not specified).

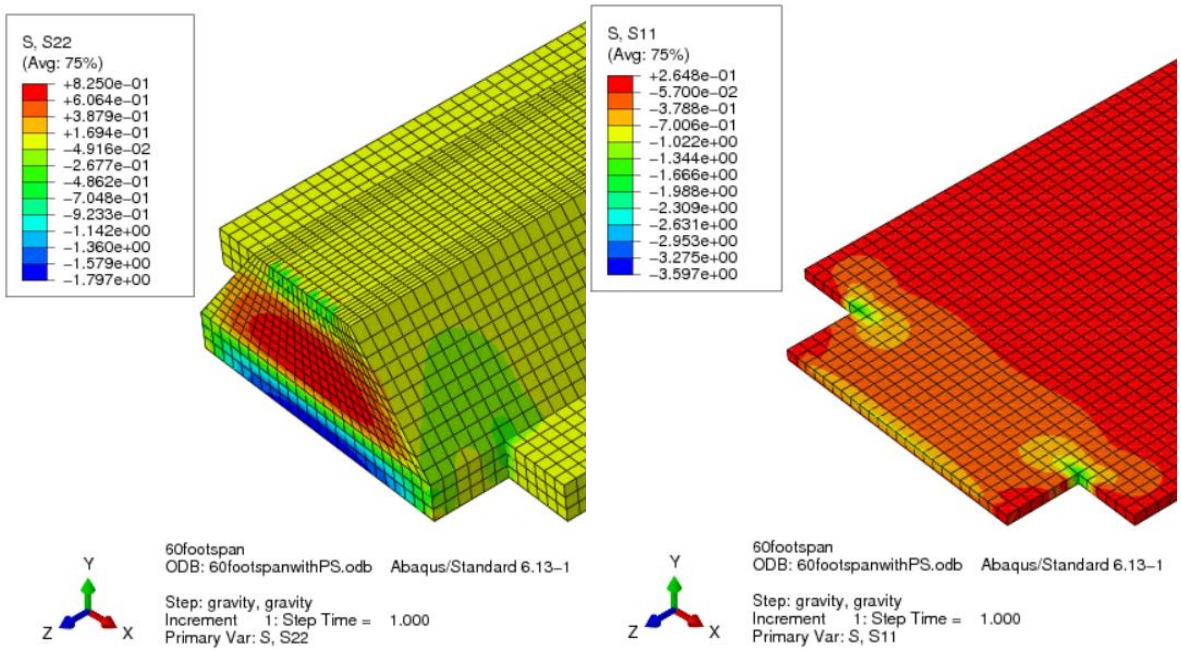

(a) (b)

Figure 15. Normal stress contours (a) vertical plane (b) horizontal plane

EVALUATION OF EXISTING DESIGN METHODOLOGIES

AASHTO LFRD SPECIFICATIONS[2]

Because the shape of the precast inverted T-beams with tapered webs is unique, engineering judgment will be used in implementing the AASHTO[2] provisions for the pre-tensioned anchorage zones. The following questions need to be addressed:

1) Should the end zone reinforcing be provided in the vertical plane, horizontal plane or both?
2) Where should the end zone reinforcing be located?

AASHTO LRFD Specifications[2] require end zone reinforcing in pre-tensioned anchorage zones, regardless of the span length, strand pattern, geometry of the precast member, eccentricity or magnitude of the prestressing force. Following is a comparison of end zone reinforcement designed based on the present AASHTO provisions[2], the finite element model results previously discussed, and the recommendations of a recently completed NCHRP[3] project. The three span lengths previously discussed will be evaluated.

41.5 foot span

The total prestressing force for the 18 in. deep precast beam used in the 41.5 foot span US 360 bridge is 1144 kips. 4% of this force equals 45.76 kips. If an allowable steel stress of 20 ksi is used, then the required area of vertical steel in the end zones is 2.29 in^2. In addition, according to AASHTO[2] provisions, this amount of steel is distributed over a distance of *h/4* from the end of the member. The area of vertical end zone reinforcing provided in the first row in the precast beams used in the US 360 Bridge is 1.08 in^2 (four legs of No.4 extended stirrups and the vertical component of the two inclined legs of the No.4 confinement stirrups (Figure 2)). In addition, the first row of vertical steel is located at 2 in. from the end of the precast beam. The second row of vertical steel provides the same area of steel and is located at 5 in. from the end of the beam, which is past the prescribed *h/4* distance. The total area of vertical steel provided in the first two rows is 2.16 in^2, which is smaller than the AASHTO[2] required 2.29 in^2. However, because the results of finite element analyses indicated that spalling stresses in the vertical plane were smaller than the modulus of rupture of the precast beam at transfer, using a slightly smaller area was deemed acceptable. In addition, to comply with the AASHTO[2] placement requirement the position of the second row can be changed to 4 in. from the end of the member rather than 5 in. (Figure 16(b)).

Bursting stresses in the horizontal plane were approximately half of the spalling stresses in the vertical plane (0.2 ksi versus 0.4 ksi). Accordingly, it would be conservative to apply the 4% rule for sizing reinforcing in the horizontal plane. In addition, because the distribution of bursting stresses was relatively uniform within the disturbed region *h*, horizontal reinforcing can be distributed throughout a distance *h* from the end of the precast flange rather than *h/4*. For the US 360 bridge, the 2.29 in^2 of horizontal reinforcing determined using the 4% rule can be distributed over a distance of 6 feet past the precast flange. This leads to approximately 0.38 in^2/ft. The closed stirrups in the US 360 Bridge consisted of No.4 at 6 in.

on center, for up to 1.5*d* from the end of the precast member (confinement steel) and No.4 at 12 in. on center for the rest of the span. In addition, No.4 at 8 in. on center transverse straight reinforcing steel was provided in the precast flanges. Accordingly, as a minimum, the provided amount of horizontal steel at the end zones was equal to 0.5 in^2/ft (Figure 16(b)).

In summary, it would be conservative to determine the vertical and horizontal steel requirements based on the 4% rule stipulated in AASHTO[2] and the distribution of such reinforcing should be such that the vertical steel is located within a distance equal to *h/4*, where *h* is the depth of the member, and the horizontal steel is located within a distance equal to *h* from the end of the precast flange, where *h* is the width of the section.

20 foot span

Similar to the 41.5 foot span, spalling and bursting stresses for the 20-foot span were lower than the modulus of rupture of the precast beam at transfer. Accordingly, end zone reinforcing is not required and the implementation of AASHTO provisions[2] for pre-tensioned anchorage zones in the vertical and horizontal planes would be conservative. The total prestressing force for the 8 in. deep precast beam is 434 kips. 4% of this force equals 17.36 kips. If an allowable steel stress of 20 ksi is used, then the required area of the steel in the end zones is 0.87 in^2. The vertical steel can be provided in one row of No.4 confinement steel and four legs of No.4 extended stirrups. The horizontal steel can be provided by the horizontal leg of the No.4 confinement reinforcing at 6 in. on center (Figure 16(a)).

60 foot span

Because spalling stresses exceeded the modulus of rupture for the precast beam at transfer, vertical reinforcing at the end zones is required to control the widths of potential cracks. The vertical tensile force at the end zone can be calculated from the tension stress in the finite elements in the end zone. The tension stress above the modulus of rupture multiplied by the area of the elements is equal to 28.5 kips, whereas the force based on the 4 % rule is equal to 78.72 kips. Therefore, the amount of vertical steel can be conservatively calculated based on AASHTO[2] provisions. The required area of vertical reinforcing in the end zones based on AASHTO[2] provisions in this case is 3.94 in^2. This area of reinforcing can be provided by placing three rows of #4 confinement steel and 4-leg #5 extended stirrups at 2 in. on center. The total area of provided vertical steel in this case will be 4.57 in^2 compared to the required 3.94 in^2 (Figure 16(c)).

Because the magnitude of the bursting stresses in the horizontal plane did not exceed the modulus of rupture for the precast beam at transfer, reinforcing steel in the horizontal plane in the end zones is not required. Accordingly, the AASHTO provisions[2] for pre-tensioned anchorage zones in the horizontal plane would yield a conservative design. The required area of horizontal reinforcing based on the 4% rule (3.94 in^2) can be partially provided by three rows of No.4 confinement reinforcing at 2 in. on center and the rest of the confinement steel at 6 in. on center. This steel area combined with No.4 transverse straight bars at 6 in. on center

yields a total area of bottom transverse steel of approximately 4.8 in^2, which is larger than the required 3.94 in^2 (Figure 16 (c)).

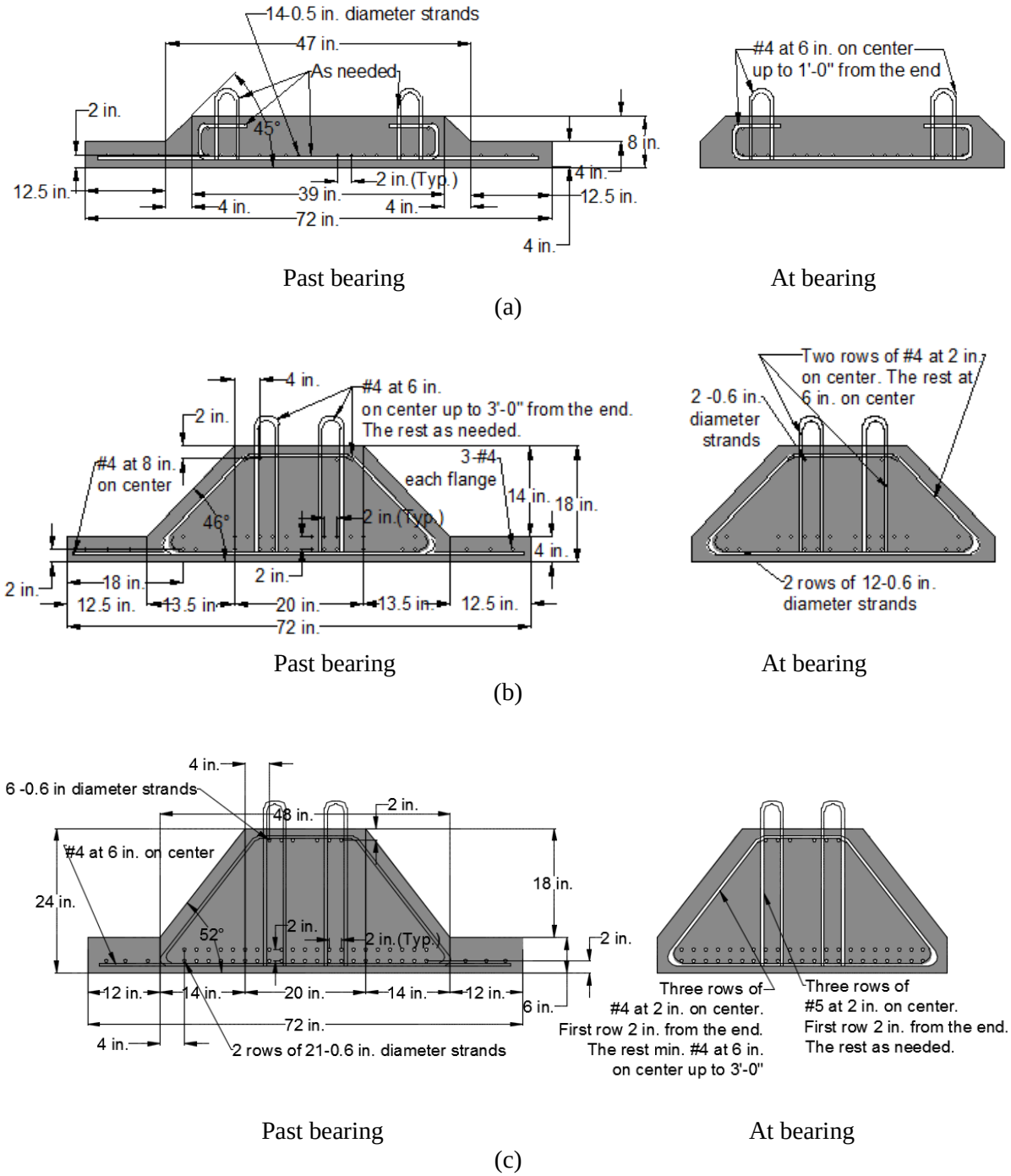

Figure 16**.** Summary of end zone reinforcing details calculated based on current AASHTO provisions[2], (a) 20 foot span, (b) 41.5 foot span, (c) 60 foot span

NCHRP WEB-ONLY DOCUMENT 173[3]

NCHRP Web-Only Document 173[3] provides recommended equations for sizing end zone reinforcing in the vertical plane. Table 3 provides the input parameters required to evaluate the recommendations of NCHRP Web-Only Document 173[3] for the three bridge spans and the associated results.

41.5 foot span

The magnitude of spalling stresses predicted by the NCHRP method[3] for the 41.5 foot span is equal to 0.106 ksi. This is lower than the magnitude of spalling stresses computed from the finite element models, which is 0.4 ksi. The NCHRP method[3] yields a smaller spalling stress for this case, however, the conclusion that no vertical end zone reinforcing is needed is consistent with the one based on finite element analyses.

Table 3. NCHRP Web-Only Document 173[3] recommendations

	20 foot span	**41.5 foot span**	**60 foot span (Same as AASHTO[2])**
h (in.)	8	18	24
P_i (kips)	417	1078	1968
A (in^2)	460	757	1044
e (in.)	1.47	2.99	3.94
d_b (in.)	0.5	0.6	0.6
f_{ci} (ksi)	5	5	5
f_s (ksi)	20	20	20
σ_s (ksi)	0.036	0.106	NA
f_r (ksi)	0.51	0.51	0.51
P_r (kips)	NA	NA	78.72
A_s (in^2)	Not Required	Not required	3.94

20 foot span

For the 20 foot span the NCHRP[3] approach predicts negligible spalling stresses at the end face (0.036 ksi). The results from the NCHRP[3] equations are in close agreement with the results from finite element analysis for the 8 in. deep precast beam, which showed negligible spalling streeses. In addition, the conclusion that no vertical reinforcing is required is supported by the results from finite element analyses.

60 foot span

For the 60 foot span, NCHRP recommendations[3] are identical with the AASHTO provisions[2] for pre-tensioned anchorage zones because the depth of the precast member for this span was 24 in.

ALTERNATIVE APPROACH USING STRUT AND TIE MODELING

An alternative approach for pretensioned anchorage zone design is to use strut and tie modeling to determine spalling forces in the vertical plane and bursting forces in the horizontal plane. Several strut and tie models were investigated in the vertical and horizontal planes with the purpose of identifying the models that most closely replicated the results obtained from finite element analysis. One property of strut and tie models is that they ignore the contribution of concrete in tension and if chosen properly usually lead to conservative designs. Only the 41.5 ft. span girder will be evaluated using strut and tie modeling.

VERTICAL PLANE

Figure 17 shows the distribution of longitudinal normal stresses caused by the prestressing force at a distance *h* from the end of the precast member for the precast beams used in the US 360 Bridge. The majority of the prestressing force was concentrated at the bottom two layers and consisted of 24 0.6 in. diameter strands, each stressed to approximately 44 kips (43.94 kips). This resulted in a prestressing force of 1055 kips 3 in. above the bottom of the beam. The remaining two strands were located 2 in. from the top of the precast beam. These two strands created a prestressing force of 88 kips. Figure 18 shows the distribution of the prestressing force in the vertical plane and the orientation of principle stress vectors. The maximum principle tensile stresses in the vertical plane are located at the end face of the precast beam (yellow vectors). Also shown in this Figure is one of the strut and tie models that was used to estimate the magnitude of the spalling stresses at the end face of the precast beam.

The longitudinal stress diagram at a distance *h* from the end of the beam was integrated to produce top and bottom horizontal forces that matched the magnitude of those applied at the end of the beam. The location of these forces is shown in Figure 19 for the models evaluated.

Three different strut and tie models were investigated as shown in Figure 19. The strut and tie Model V1 consists of only one tension tie and is the model that matched most closely the distribution of spalling stresses at the end face of the precast beam. The disadvantage of this model is that all the vertical steel intended to resist spalling stresses must be placed within 4.5 in. (*h/4*) from the end of the beam. The tension force in the tie was 28.2 kips (as opposed to 45.7 kips determined using the 4% rule of AASHTO provisions[2]). If a 20 ksi allowable stress is used to determine the area of vertical steel then the required area is 1.41 in^2. The total vertical area of steel in the first row, used in the precast beams for the US 360 Bridge, was 1.08 in^2, which is approximately 77% of the required steel area based on strut and tie model V1. The second row of extended stirrups and confinement steel is the same as the first row and is located 5 in. from the end of the member, which is past the prescribed distance of *h/4* (4.5 in.). However, because the results of finite element analyses for the 41.5 foot span revealed that spalling stresses at the end of the beam were smaller than the modulus of rupture of concrete at transfer, such a distribution of steel at the end zones was deemed acceptable. In addition, the visual inspection of all fabricated precast beams confirmed that no cracking was observed at the end zones. Compared to the 4% AASHTO[2] rule, strut and tie model V1 leads to more economical designs and less congestion in the end zones. However, experimental testing is

required to validate the suitability of this model for sizing vertical reinforcing in the end zones, especially for cases when spalling stresses exceed the modulus of rupture of concrete at transfer.

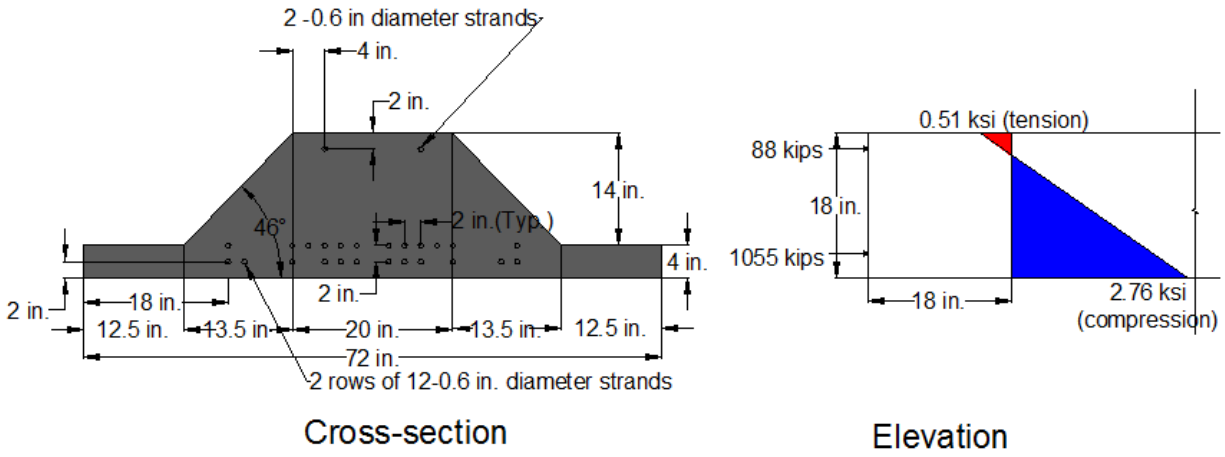

Figure 17. Distribution of longitudinal normal stresses at the ends of the precast beam

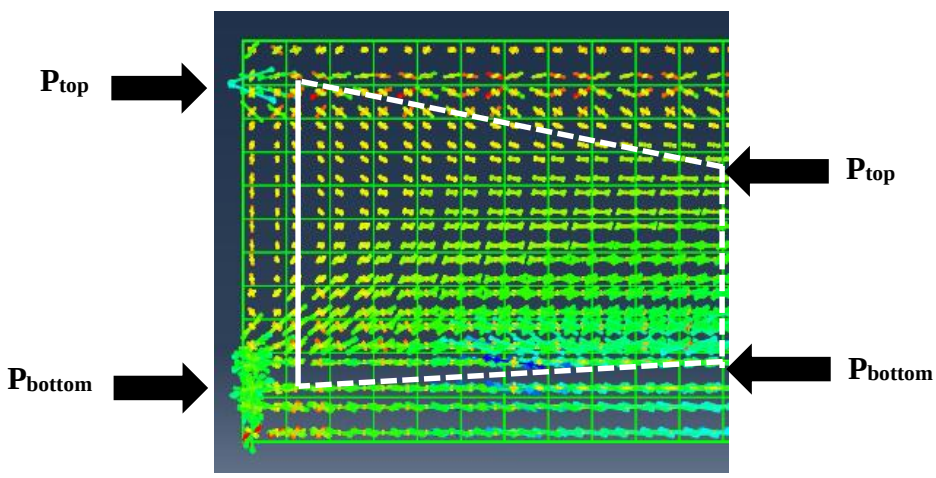

Figure 18. Principle stress vectors for 41.5 foot span Case 3 – vertical plane

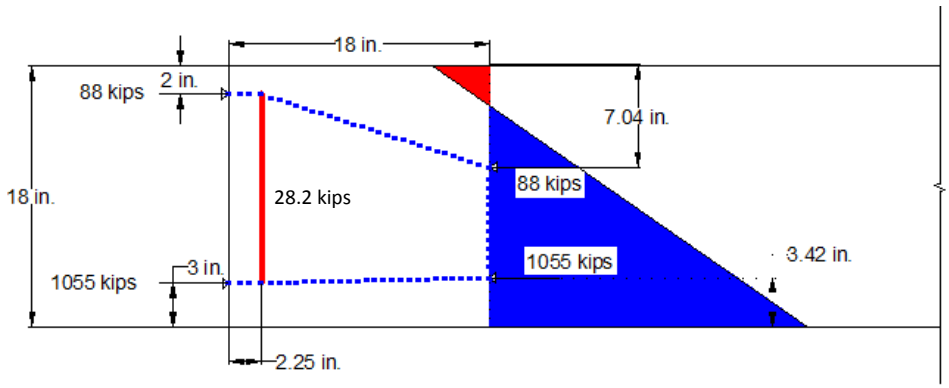

(a) Model V1

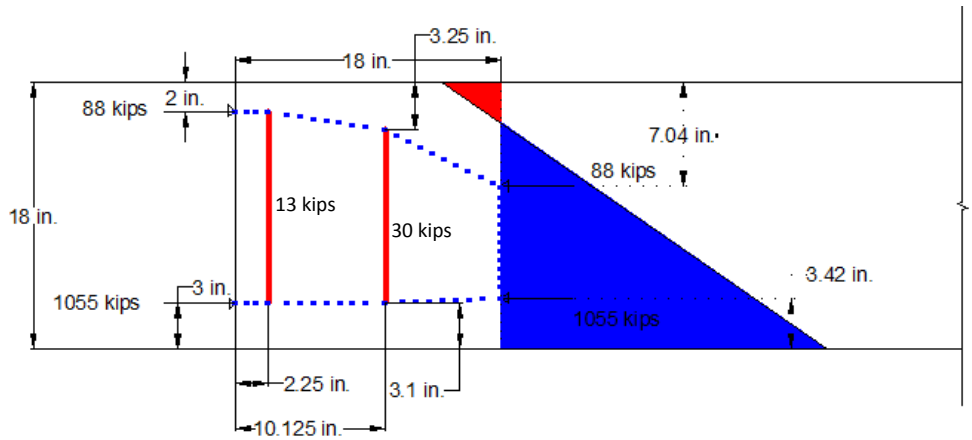

(b) Model V2

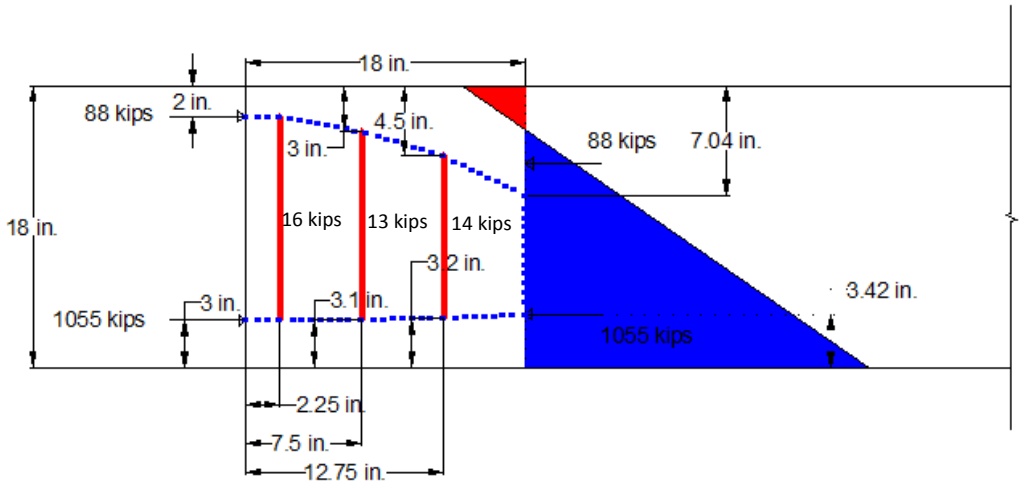

(c) Model V3

Figure 19. Strut and tie models for the vertical plane

Strut and Tie models V2 and V3 were attractive alternatives, because they allow the distribution of vertical steel at the end zone to be uniform throughout the disturbed region *h*, which is helpful in avoiding congestion. The sum of tension forces in the ties of model V2 is equal to 43 kips, which is close to 45.72 kips estimated based on the 4% AASHTO[2] rule. Similarly, the sum of tension forces in the ties of model V3, is also equal to 43 kips, and allows and even more uniform distribution of vertical steel in the end zone. However, these two models were not favored because the distribution of spalling stresses at the end zones obtained from finite elements analysis were highest at the end face of the member, and diminished quickly away from the end of the member.

HORIZONTAL PLANE

Figure 20 illustrates the diffusion of the prestressing force introduced in the bottom two strand layers in the horizontal plane using principle stress vectors. Because the prestressing force at the bottom two strand layers was introduced within the footprint of the precast web, it will tend to distribute outwards towards the flanges as it is being transferred to the surrounding concrete. Also shown in this Figure is one of the strut and tie models used to determine the magnitude of bursting stresses within the disturbed region.

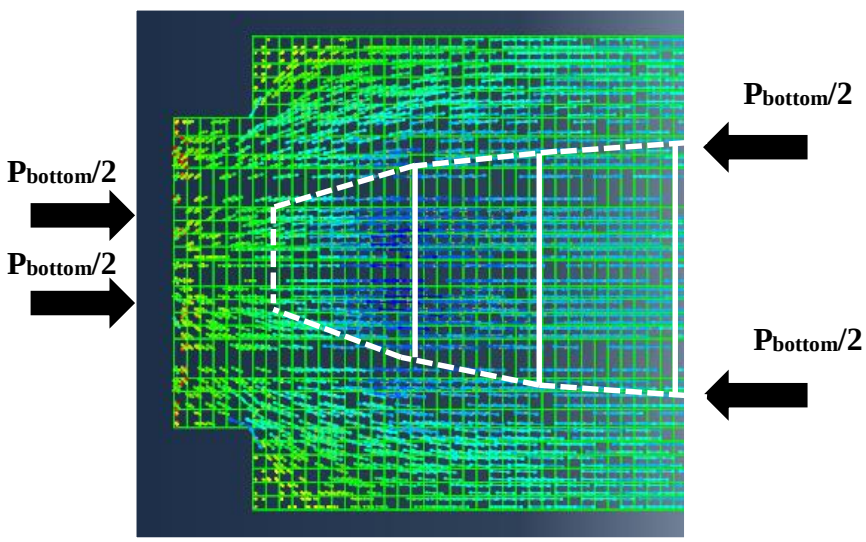

Figure 20. Principle stress vectors for 41.5 foot span Case 3 – horizontal plane

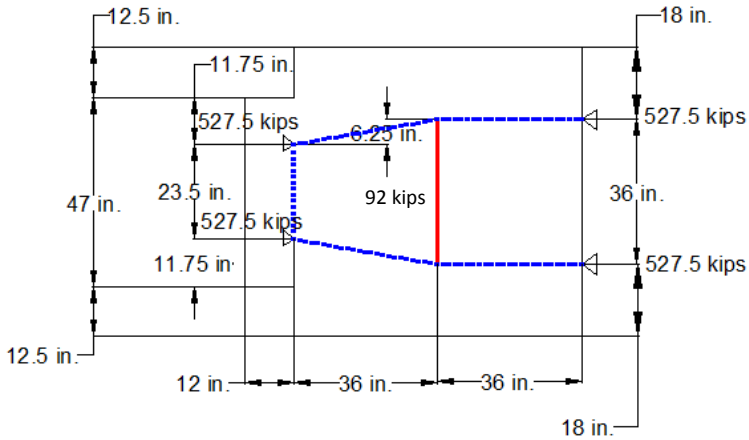

(a) Model H1

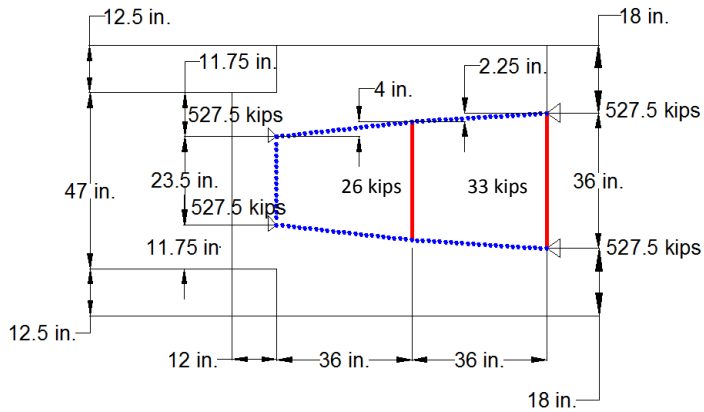

(b) Model H2

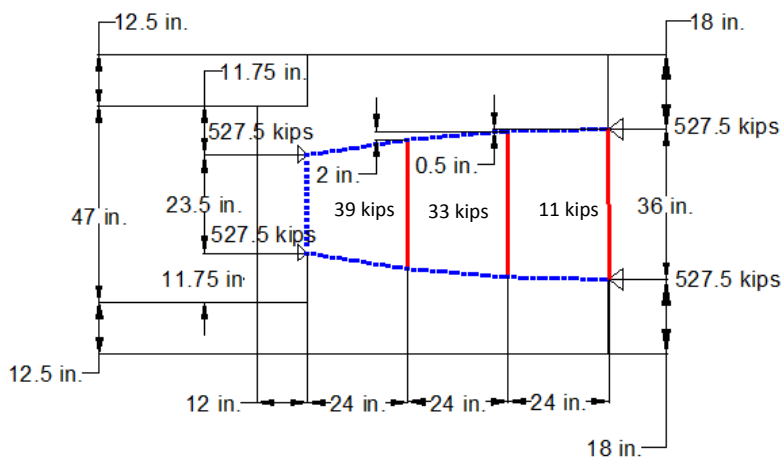

(c) Model H3

Figure 21. Strut and tie models for the horizontal plane

Three strut and tie models were investigated (Figure 21 (a)-(c)). Model H1 is the simplest of the three and consist of only one tension tie. The tension force in the tie is 92 kips, which is approximately 8.7 % of the total prestressing force in the bottom two strand layers. Model H2 consist of two tension ties. The sum of tension forces in the ties of this model is 59 kips, which is 5.6% of the total prestressing force in the bottom two strand layers. Models H1 and H2 are attractive because of their simplicity, however because the distribution of horizontal bursting stresses observed in the finite element models was relatively uniform in the disturbed region they were not considered for adoption in design. Model H3 was the one that most closely matched the distribution of bursting stresses. This model consists of three tension ties throughout the disturbed region. The sum of tension forces in the ties is 83 kips, which is 7.87 % of the total prestressing force in the bottom two strand layers. The utilization of this model in design presents an even more conservative approach compared to the 4% AASHTO[2] rule. If this model is selected, then the horizontal reinforcing can be distributed uniformly throughout the disturbed region.

SUMMARY

Table 4 provides a summary of end zone reinforcing determined using the various methods described in this paper. With the exception of the vertical plane in the 24 in. deep precast beam used in the 60-foot span, the results of finite element analyses suggest that no end zone reinforcing is required for the other cases. As stated earlier, AASHTO LRFD Specifications[2] require end zone reinforcing in pre-tensioned anchorage zones, regardless of the span length, strand pattern, geometry of the precast member, eccentricity or magnitude of the prestressing force. Table 4 provides the end zone reinforcing for the vertical and horizontal planes based on AASHTO[2]. The result of the method proposed in the NCHRP[3] report are consistent with the results of finite element analyses. For the 24 in. deep precast beam used in the 60-foot span the NCHRP method[3] predicts a higher amount of vertical reinforcing and can therefore be used conservatively in design. Only the 18 in. deep precast beam used in the US 360 Bridge (41.5-foot span) was evaluated using the strut and tie method. Compared to the 4% AASHTO[2] rule, strut and tie model V1 leads to designs that are more economical and creates less congestion in the end zones. However, experimental testing is required to validate the suitability of this model for sizing vertical reinforcing in the end zones, especially for cases when spalling stresses exceed the modulus of rupture of concrete at transfer. In the horizontal plane, strut and tie model H3 presents an even more conservative approach compared to the 4% AASHTO[2] rule. If this model is selected, then the horizontal reinforcing can be distributed uniformly throughout the disturbed region.

Table 4. End zone reinforcing determined using various methods

	Area of end zone reinforcing (in.^{2})					
	20 foot span		41.5 foot span		60 foot span	
	Vertical	Horizontal	Vertical	Horizontal	Vertical	Horizontal
FEA	Not required	Not required	Not required	Not required	1.43	Not required
AASHTO[2]	0.87	0.87	2.29	2.29	3.94	3.94
NCHRP[3]	Not required	Not addressed	Not required	Not addressed	3.94	Not addressed
Strut and Tie	Not evaluated	Not evaluated	1.41	4.15	Not evaluated	Not evaluated

CONCLUSIONS AND RECOMMENDATIONS

Precast inverted T-beams with tapered webs present a unique shape that is being implemented for the first time in Virginia in the construction of the US 360 Bridge near Richmond. Properly accounting for stresses created in the end zones as a result of the diffusion on the prestressing force from the strands into the surrounding concrete is essential to preclude excessive cracking that may lead to strength and serviceability concerns. While 3D linear elastic finite element analyses were employed in this study to gain an understanding of the stresses that develop at the end zones of precast inverted T-beam in the vertical and horizontal planes, such analysis may not always be a viable option in a design office. Accordingly, the following conclusions and recommendations are intended to aid engineers when sizing reinforcing in the pre-tensioned anchorage zones of precast inverted T-beams with tapered webs.

Vertical Plane:

- Although this study did not include an exhaustive array of various precast beam depths, it can be concluded that precast inverted T-beams 18 in. deep or less experience spalling and bursting stresses that are lower than the modulus of rupture of concrete at transfer. As a result, theoretically no vertical reinforcing is required to resists these stresses. The recommendations provided in NCHRP Report[3] corroborate this conclusion and may be used to evaluate the need for such reinforcing. The application of AASHTO Provisions[2] for pre-tensioned anchorage zones in the vertical plane of precast inverted T-beams with tapered webs that are 18 in. deep or less, provides a conservative alternative. If such vertical reinforcing is provided, it should be placed with a distance equal to *h/4* from the end of the beam, where *h* is the depth of the precast member, or as close to end face as practically possible, because spalling stresses at the end face were the dominating type of tensile stresses in terms of magnitude.

- While the 18 in. depth for precast inverted T-beams with tapered webs does not represent the dividing line at which spalling stresses at the end faces exceed the modulus of rupture of concrete, it can be conservatively stated that the application of

AASHTO provisions[2] for beams that are 18 in. deep or greater is also conservative. Similarly, for the beams in this bracket, the vertical reinforcing at the end zones should be placed with a distance equal to *h/4* from the end of the beam, where *h* is the depth of the precast member, or as close to end face as practically possible, because the magnitude of vertical tensile stresses at the end zones diminishes quickly past the first few inches from the end face. Vertical steel at the end zones can consist of stirrups as well as the vertical component of the AASHTO[2] required confinement steel.

- As an alternative to AASHTO provisions[2] and NCHRP recommendations[3], vertical reinforcing in the end zones can be calculated based on strut and tie model V1. Compared to the 4% AASHTO[2] rule, strut and tie model V1 leads to designs that are more economical and creates less congestion in the end zones. However, experimental testing is required to validate the suitability of this model for sizing vertical reinforcing in the end zones, especially for cases when spalling stresses exceed the modulus of rupture of concrete at transfer.

Horizontal Plane:

- In none of the cases considered in this study did the bursting stresses exceed the modulus of rupture of concrete at transfer. Accordingly, no reinforcing is required in the horizontal plane to resist these stresses. However, the application of the 4% rule presented in AASHTO[2] for sizing reinforcing in the horizontal plane is a conservative alternative. If such reinforcing is provided, it should be placed within a distance *h* from the end of the precast flange. The AASHTO[2] required confinement steel can be used for this purpose given that it needs to be provided for a distance up to 1.5*d* from the end of the member. In addition, the straight transverse bars in the precast flanges provided to resist the weight of wet concrete and transverse bending moments due to live loads can be used to resist the bursting force based on the 4% rule.

- Alternatively, horizontal reinforcing at the end zones can be sized based on strut and tie model H3. The utilization of this model in design presents an even more conservative approach compared to the 4% AASHTO[2] rule. If this model is selected, then the horizontal reinforcing can be distributed uniformly throughout the disturbed region.

ACKNOWLEDGEMENTS

This research was sponsored by the Virginia Department of Transportation. The help and the insightful comments of Andy Zickler from the Virginia Department of Transportation and Mike Brown from Virginia Transportation Research Council are greatly appreciated. Also, the help of Amey Bapat graduate research assistant was instrumental in the completion of the analytical investigation.

REFERENCES

1. A.E.H. Love, "A treatise on the mathematical theory of elasticity" Cambridge University Press, 1927. (Dover reprint ISBN 0-486-60174-9)
2. AASHTO, 2013, AASHTO LRFD Bridge Design Specifications 6th Edition, Washington, DC
3. French. C.W., Shield, C.K., Klasesus, D. Smith, M., Eriksson, W., Ma, J.Z., Zhu, P., Lewis, S., Chapman, C.E. - "Cast-in-Place Concrete Connections for Precast Deck Systems" – NCHRP Web-Only Document 173 – January 2011 – National Cooperative Highway Research Program – Transportation Research Board of the National Academies
4. Menkulasi, F., Mercer, M., Wollmann, C. L .R, Cousins, T., "Accelerating Bridge Construction Using The Precast Inverted T-Beam Concept", PCI 2012 Convention and National Bridge Conference, September 29 -October 02, 2012.
5. Menkulasi, F., Wollmann, C.L.R., Cousins, T., "Investigation of Time Dependent Effects on Composite Bridges with Precast Inverted T-Beams", PCI 2013 Convention and National Bridge Conference, September 21-24, 2013.
6. Gergely, P., Sozen, M.A., Seiss, C.P., "The Effect of Reinforcement on Anchorage Zone Cracks in Prestressed Concrete Members", *Structural Research Series*, No. 271, 1963, University of Illinois
7. Fountain, R.S., "A Field Inspection of Prestressed Concrete Bridges", Portland Cement Association (PCA),1963
8. Hawkins, N.M., Shahawy, M., "Anchorage Zone Stresses in Prestressed Concrete Beams", Structural Research Series No. 207, 1960. University of Illinois
9. Eriksson, W.D., "Vertical Tensile Stresses in End Regions of Precast Composite Slab-Span Systems and Restraint Moments", Master's Thesis, May 2008. University of Minnesota-Twin Cities Graduate School, Minneapolis, MN
10. ABAQUS User's Manual Version 6.11-2, Dassault Systemes Simulia Corp.,2012
11. Base, B.D., "An Investigation of Transmission Length in Pre-tensioned Concrete", Portland Cement Association Research Report No. 5, 1958
12. Uijl, J.A.d., "Tensile Stresses in the Transmission Zones of Hollow-Core Slabs Prestressed with Pretensioned Strands", *Report 5-83-10*, The Netherlands: Delft University of Technology Department of Civil Engineering, 1983